Stay connected with USB 3.1

The next generation standard camera interface

1 Interface Evolution

The Universal Serial Bus - a 20 year old success story - has made a forward-looking evolution. In previous generations USB was only a data interface, capable of supporting limited power for a device. With the USB 3.1 specification the USB implementers forum (USB-IF) has reworked also other sections.

The most significant improvement is the new USB Type-C connector which put an end to the plug confusion and should become the new standard. But what are the innovations of USB 3.1 and what are the benefits for USB as a camera interface? A good reason to review the USB history.

2 USB 2.0

IDS Imaging Development Systems GmbH introduced the first generation of **USB 2.0 cameras in 2004.** At this time analog cameras and frame grabbers were still very common. For digital cameras, FireWire was considered the way to go in applications that did not require exceedingly long cables.

Yet, with the uEye line of cameras, IDS was able to proof that the universal serial bus technology was very well suited even for **industrial applications**. Systems with 20 and more cameras connected to a single host PC, using industrial grade cables with lockable connectors, were possible even with USB 2.0.

Eventually machine vision users came to appreciate the benefits of USB 2.0 technology. FireWire was gradually replaced by a combination of USB and Gigabit Ethernet for many applications.

3 USB 3.0

And then, in 2008, came **the USB 3.0 standard**. The USB-IF which groups companies such as HP, Intel and Microsoft, presented the first revision of the new specification. The first chips with USB 3.0 became available by mid-2009. Data rates exceeding 400 MByte/sec became possible.

The **main objectives** in the development of the new standard were to remove USB 2.0's most severe limitations by

- **Increasing the data rate** by a factor of about ten to reach 5 Gbps
- **Optimizing power management** of connected devices
- **Omitting the polling** procedure used in the previous USB protocol
- While **maintaining** the existing USB **infrastructure**

The **benefits** of this specification “upgrade” for machine vision are obvious:

- Today’s **most popular CMOS sensors** can be used. Their output data rate is much too high for USB 2.0, FireWire and GigE.
- If you want to use a **cheap setup** without a frame grabber or dedicated high-speed interfaces, USB 3.0 is the only choice for implementing **fast sensors**.

IDS, among other camera manufacturers, introduced the **first USB 3.0 cameras in 2011**.

In the Vision Systems Design poll and Framos market survey in 2015, USB 3.0 was labeled the fastest growing machine vision camera interface, followed by GigE for applications requiring longer cables. (Häussler, 2015)

"USB 3.0 claims top spot as most popular interface in a Vision Systems Design reader's poll that asked what camera type will be the most popular in two years' time. The answer is definitive: USB 3.0." In that poll, 45% indicated that USB 3.0 would be the most popular camera type in two years, followed by GigE at 30%, and 10GigE at 14%. (Carroll, 2015)

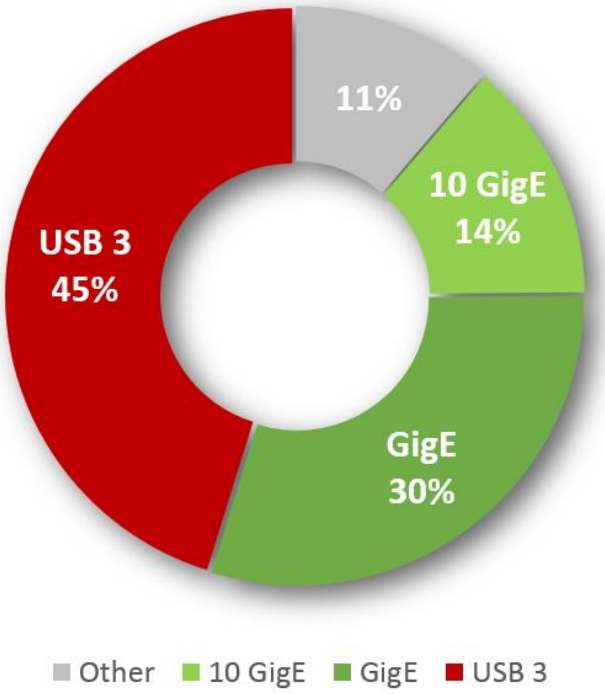

Figure 1 - Survey result of VisionSystems DESIGN: Most popular camera type in two years.

USB as a camera interface has now become widely adopted and accepted by both, manufacturers and users of machine vision cameras.

4 USB 3.1

But, of course, development of the USB standard and technology did not end here. In July 2013, the usual suspects – Microsoft, Intel, Renesas etc. – finished the "Universal Serial Bus 3.1 Specification".

So what was new with USB 3.1? The obvious answers seemed clear:

- it's **faster**
- it has a **new connector**
- it allows for **more power** transfer

However, with USB 3.1 something changes: it does not necessarily introduce higher bandwidth. Unfortunately, things got a bit more complicated for USB users with the new revision number.

Year	USB Standard	Basics
1996	USB 1.0	1.5 Mbit/s "Low Speed"
1998	USB 1.1	12 Mbit/s "Full Speed"
2000	USB 2.0	480 Mbit/s "High Speed"
2008	USB 3.0	5 Gbit/s "SuperSpeed"
2012	USB PD 1.0	7.5 W
2013	USB 3.1 (Gen1)	5 Gbit/s "SuperSpeed"
2014	USB Type-C	Reversible
2016	USB PD 3.0	100 W

Table 1 - A brief overview of the USB standards and performance history

Transfer rate

The USB 3.1 specification technically replaces the USB 3.0 specification while maintaining **full backwards compatibility** with USB 3.0 and 2.0. But it now allows for either the current 5 Gbps or a new 10 Gbps mode. To differentiate between the 2 performance levels, USB-IF identifies **two transfer rates** with different logos:

USB 3.1 Gen 1 at 5 Gbps

USB 3.1 Gen 2 at 10 Gbps

For USB 3.1 Gen 1, the official name still is **Super-Speed USB**. It is important to understand that the USB 3.1 Gen 1 and USB 3.0 terms are synonymous!

For USB 3.1 Gen 2 the official marketing name is **SuperSpeed USB 10 Gbps**, although it is informally referred to as SuperSpeed+. For Gen 2 the data signaling rate is twice as high as it currently is with USB 3.0. And the effective data payload will be even higher due to further efficiency improvements on protocol level.

So, USB 3.1 can mean higher speed, but does not have to mean higher speed.

Connector

So what about the new connector? One can hardly read a technology magazine these days that does not feature one or several products with this new connector.

This connector is bound to become the ubiquitous and **all-purpose** single connector on PCs moving forward. In 2015 the Apple MacBook was shipped with only one single USB-C connector for powering the device, connecting accessories and displays. The current generation has four USB-C connectors, but again **no other connector**. Currently we see USB Type-C adoption on cables, smart phones, tablets, hard disks, monitors, docking stations, power adapters, notebooks, desktop PCs, USB thumb drives and so on.

USB Type-C is a really great connector, possibly the best **connector specification** ever made:

It's small, fast, very versatile, higher power transfer – and the nicest thing about it: it's **reversible**! Just imagine how much life time each of us wasted, rotating USB-A plug 3 times to find the correct orientation.

With a height of only 2.5 mm and a width of just over 8 mm, it is smaller than the current Type-A or Micro-B connectors, which is great because it allows to build **smaller devices**.

Type-C features 24 **pins**, more than twice as many as any previous USB connector, although not all of them have to be used on every cable. These pins include USB 2.0 and SuperSpeed data buses, power and ground, and the communication channel for PD protocol negotiation.

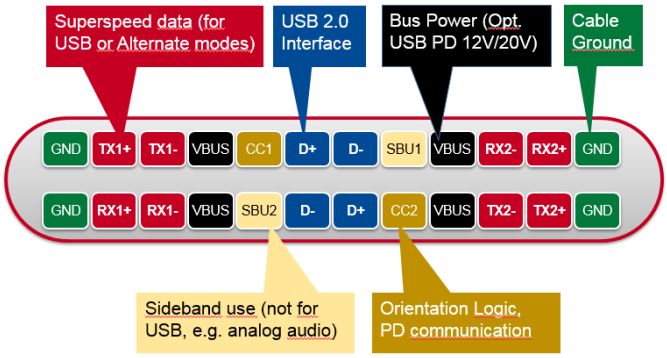

Figure 2 - USB Type-C receptacle pinout end-on view

In combination with the Cable Configuration Pins (CC), the connector allows not only for USB data transfer and power supply, but also offers **alternate transfer modes** which can be used to connect display port (DP Alt Mode), Thunderbolt as well as other protocols.

USB 3.1 devices don't necessarily need the Type-C connector. This is a **separate specification** and is optional for USB 3.1 devices – technically, even USB 3.1 Gen 2 would work over the old Type-A connector, although it will be used a lot because Type-C offers so many more possibilities!

What is also new with USB Type-C? The USB host-to-device relationship is now accomplished through a "Configuration Channel (**CC) controller" chip** within the plugs and receptacles. A Type-C cable assembly using this chip embedded in one or both plugs is a **"smart" cable**, which is typically referred to as electronically marked cable assembly (EMCA). These cables can **report cable characteristics** to Type-C ports on hosts and devices, such as its current-carrying capability, performance, and vendor identification (USB Type-C Cable ID function). Considering that these cables can carry up to 100 W of power, it is especially important that they correctly report their electrical capabilities. All full-featured USB Type-C cables have to be **electronically marked**.

When you buy a USB Type-C camera make sure to get **good quality cables** from a **trusted supplier**, ideally the camera manufacturer itself.

Power Delivery

So let's look at the third feature that is commonly associated with USB 3.1: **higher power delivery**. USB Power Delivery also is not a new feature, the standard was first introduced in 2013 with a modest power transfer of 7.5 W in order to charge batteries via USB. Since then, the PD standard has been **constantly expanded and improved**, with the most recent specification 3.0 having been released just this March. The current power delivery specification allows power transfer of up to 20 V and 5 A, or 100 W, depending on the device and host capabilities. This is a lot of power and will **suffice for many applications** – although, unfortunately, it is not enough to charge electric cars… yet.

Power Delivery is **not mandatory for Type-C** connectors. Basically it is possible to use the type C connector with devices that do not support the power delivery protocol. However, only the power delivery protocol allows for independent data and **power role swaps** for ultimate flexibility. PD allows for a monitor powering a computer which in turn powers the camera. Those roles of the individual devices can be swapped seamlessly

even **during operation**, for example in case one device runs out of power or gets disconnected from power.

Power delivery supports Dual Role, which means it can work in both directions so the host can power a device, or the other way round, or both the computer and the camera can be powered through a display, and so on.

5 Machine Vision Camera Impact

Let us look a bit closer at the benefits of **the combination of these three great standards** in machine vision cameras.

Supplying **more power** to the camera, such as in the new IDS uEye LE USB 3.1 Gen 1 models with Type-C connector, will make **system design much easier** as it can eliminate the need for a power supply in many compact systems. IDS is introducing a lineup of cameras that will supply 12 W through the camera, as long as enough current is provided from the host, and even more for upcoming models. This will be enough power, for example, to **drive illumination** in your device, and will help make your **system set up less complicated** and less expensive.

The upcoming doubling of the transfer rate to SuperSpeed 10 Gbps and the data payload of almost 1 GByte/s will not only allow for **very fast sensors**, but also data output in RGB formats and bit depths of more than 8 bits per channel become possible.

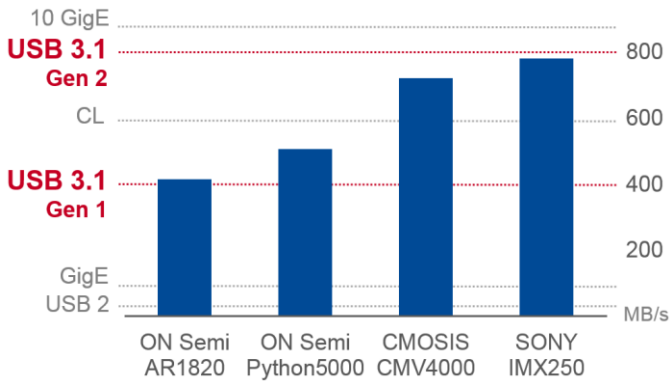

Figure 3 - Data output rates of 4 current generation CMOS sensors, which would benefit from higher USB 3.1 Gen 2 transfer rate.

The obvious benefits of USB 3.1, the Type-C connector and power delivery offer **great potential for your camera application**. But another important question for machine vision customers is: “What about **cable length**?”

Basically **nothing has changed** in this regard over previous USB implementations, at least not for 5 Gbps speed. A common misconception is that cable length is limited by the USB specification. It is not. In fact the specification explicitly states that it does not specify cable length. It does however specify electric parameters such as voltage drop, signal rise time, resistance etc. It also lists cable lengths that will typically be achieved with common cable material. However, when **using high quality material** and assembly, there is **no restriction on cable lengths**.

Obviously, with USB 3.1 Gen 2 speed it will be a more **challenging for cable manufacturers** to ensure that all the parameters are met for long cables. Possibly there will be shorter cables with 1 or 2 m initially for 10 Gbps signaling.

For the USB 3.0 Micro-B cables, passive cables up to 5 or 8 m are available. With USB 3.1 and USB Type-C IDS currently sees cables with 3 m length but **expect longer cables** to become available soon.

Another benefit of Type-C for the implementation of longer cables or fiber optic cables (up to 100 m) is to use **active EMCA’s** with additional electronics to provide signal conditioning by adding a re-driver on the data path. Active cables that report their configuration or use signal conditioning are referred to as “managed active cables”.

With more wires for the additional signals (full featured cable with Type-C plug on both sides), the cables get a bit **larger in diameter**. Cables are available with both, Type-C to Type-C (full featured) and Type-C to Type-A plugs (for pure data connections).

Ok. But is Type-C really **suitable for industrial applications**? Yes. USB Type-C cables are available with lockable connectors and even hi flex drag chain versions for small scale robotics.

In March of this year, the USB IF Device Working Group published the **USB Type C Locking Connector Specification**.

Members of this group come from renowned companies such as Apple, Dell, and Intel. The specification defines standardized screw locking mechanisms for USB Type-C with a single screws (on top of the connector) ore with dual locking screws.

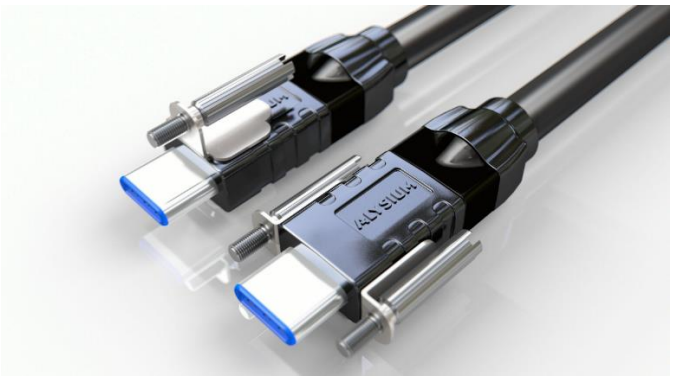

Figure 4 - USB Type-C single and dual screw locking plugs (Alysium-Tech GmbH, 2016)

The cable manufacturers are currently preparing first samples of lockable Type-C plugs.

6 Summary

So we have several new terms and specifications here:

- USB 3.1 Gen 1 and USB 3.1 Gen 2
- Type-C connector
- Power Delivery.

The USB implementer's forum's idea is for manufacturers to **clearly advertise** the performance, power and connector capabilities of each device separately. Now, taking all of these together, a camera featuring all of the currently available technology would have to be called:

USB 3.1 Gen 1 camera with Type-C™ connector and Power Delivery

USB SuperSpeed cameras are used in a large number of applications already and continue to win an increasing share of new machine vision design-ins. Users that need **high performance** cameras should first consider USB 3.1 products before turning to bulky, power-hungry and comparably expensive solutions with high speed interfaces and frame grabbers.

When considering USB 3.1 Gen 1 cameras, switching to an **USB Type-C model** now, will offer an absolutely seamless transition to twice the data rate in a couple of years – and USB 3.1 cameras with Type-C connectors do offer many great features that you will **benefit** from right away:

- Very high data rates of more than **400 MB/s**
- The **best cost-to-data-rate ratio** of any camera interface available
- Super **compact connectors** that are lockable, versatile, and reversible.
- Power delivery for supplying **sufficient power** to your device allows you to eliminate cabling, saving cost and time.
- Of course, USB 3.1 Gen 1 and Gen 2 are fully **USB 3 Vision compatible**
- USB 3.1 offers so many possibilities for connecting almost any kind of device that it will become the **single ubiquitous digital interface.**

Cameras which combine all these benefits are already available. In late summer of 2016, IDS introduced several new models featuring USB 3.1 Gen 1, the great new type C connector, and hardware support for 12 W power delivery.

So don't wait any longer. Taste the future. "**Stay connected with USB 3.1**"

7 Bibliography

Alysium-Tech GmbH. (2016). Retrieved November 2016, from http://www.alysium.com/special/usb-c

Carroll, J. (2015, November 9). *VisionSystems DESIGN.* Retrieved November 14, 2016, from http://www.vision-systems.com/articles/2015/11/usb-3-0-claims-top-spot-as-most-popular-interface-in-vision-systems-design-poll.html

Häussler, U. (2015, November 9). *VisionSystems DESIGN.* Retrieved November 14, 2016, from http://www.vision-systems.com/articles/print/volume-20/issue-10/features/industrial-camera-technologies-interfaces-and-applications.html

USB-IF. (2016, März 9). USB Type-C Locking Connector Specification 1.0. Retrieved November 22, 2016, from http://www.usb.org/developers/docs/

IDS Imaging Development Systems GmbH
Dimbacher Str. 6-8
74182 Obersulm
T: +49 7134 96196-0
F: +49 7134 96196-99
E: sales@ids-imaging.com
W: www.ids-imaging.com